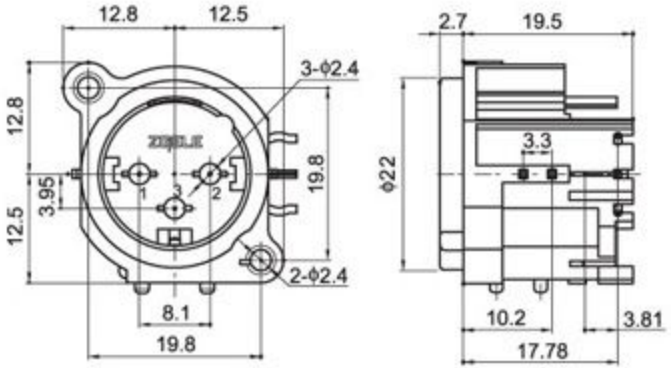

P.C.B LAYOUT
(VIEWED FROM COPPER SIDE)

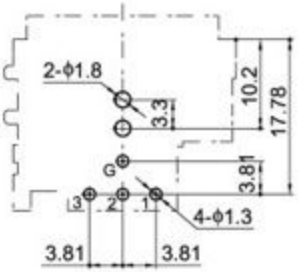

SCHEMATIC LAYOUT

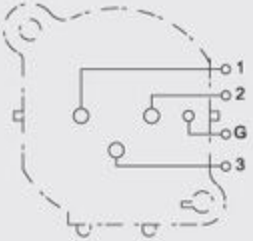

锁释方式: 无锁扣片 (No Locking Plate)
接地方式: "J"型接地片 (J Type Ground Link)