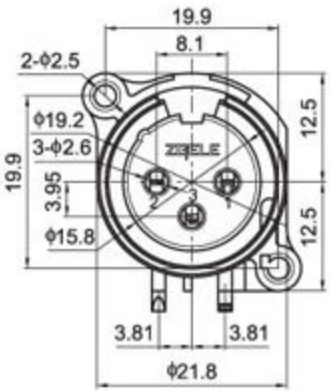

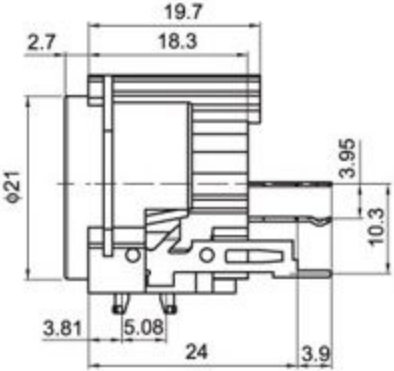

P.C.B LAYOUT
(VIEWED FROM COPPER SIDE)

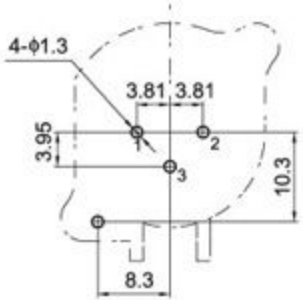

SCHEMATIC LAYOUT

锁释方式: "F"型锁扣片 (F Type Locking Plate)
接地方式:无接地片 (No Ground Link)